SIEMENS

Operation Manual and Mounting Instructions for a VGD4/VRD4 double gas valve with 2 SKPx5 actuators

Note!
The combination of a VGD4/VRD4 double gas valve with a QPLx5 pressure switch and SKPx5 actuator does not require any maintenance.

Caution!
This document is intended for end users. All legal, safety, warning, and technical notes contained in the data sheets for the SKPx5 actuator (N7643), VGD4 double gas valve (N7631), VRD4 double gas valve for biogases and recycling gases (N7649), and the QPLx5 pressure switch (N7221) are also applicable!

CC1U7643en
10.12.2019

Smart Infrastructure

1 Use

The combination of the SKPx5 actuator and VGD4/VRD4 double gas valve takes on the functions of a

- Safety shutoff valve (SKP15)
- Safety shutoff valve with specific pressure control (SKP25)

1.1 SKP15 actuator

The electrohydraulically operated SKP15 gas fittings together with VGD4/VRD4 work exclusively as a safety shutoff valve (OPEN/CLOSED) and are used primarily on gas-fired combustion plant. They open slowly and close rapidly. The SKP15 actuator can be supplied with end switches including a valve stroke display or without an end switch or valve stroke display.

1.2 SKP25 actuator

The electrohydraulically operated SKP25 gas fittings together with VGD4/VRD4 work as a safety shutoff valve (OPEN/CLOSED) and are also used as a gas pressure governor. This controls the gas pressure on the outlet side according to the setpoint value established by means of a setpoint spring. The SKP25 actuator can be supplied with or without an end switch.
The valve stroke display is generally provided.

1.3 Application example

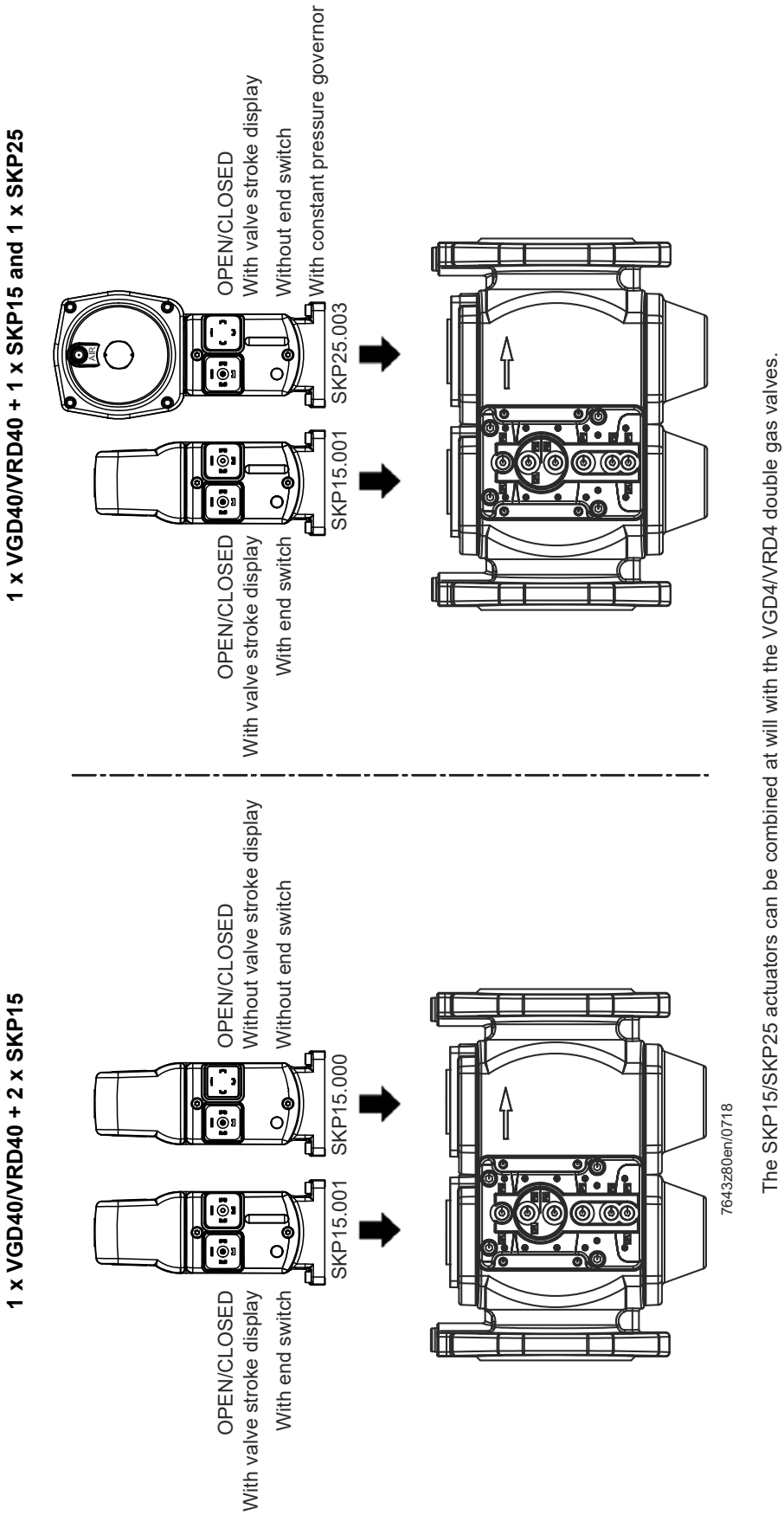

The SKP15/SKP25 actuators can be combined at will with the VGD4/VRD4 double gas valves.

2 Description of the SKPx5 actuators

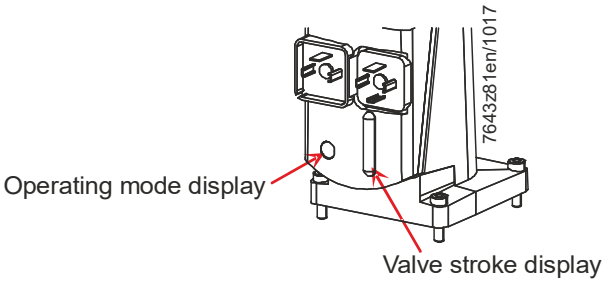

The valve stroke display indicates the relative valve stroke. Depending on the tolerance limits, the fully closed position of the valve may vary. The maximum achievable valve stroke with a fully open valve seat varies according to the type and size of the valve: From 12 mm to 25 mm. During normal operation of an SKP25 actuator, it is also possible to observe the stability and oscillation tendency in addition to the opening of the valve seat.

Note!
SKP15.000Ex actuators do not have a valve stroke display!

2.1 Electrical connection

120 V~/230 V~ activation of the SKPx5 actuator ➔

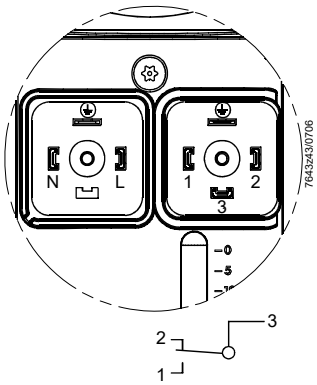

🡐 Potential-free end switch (indicating the fully closed position) only with the SKPx5.xx1xx actuator

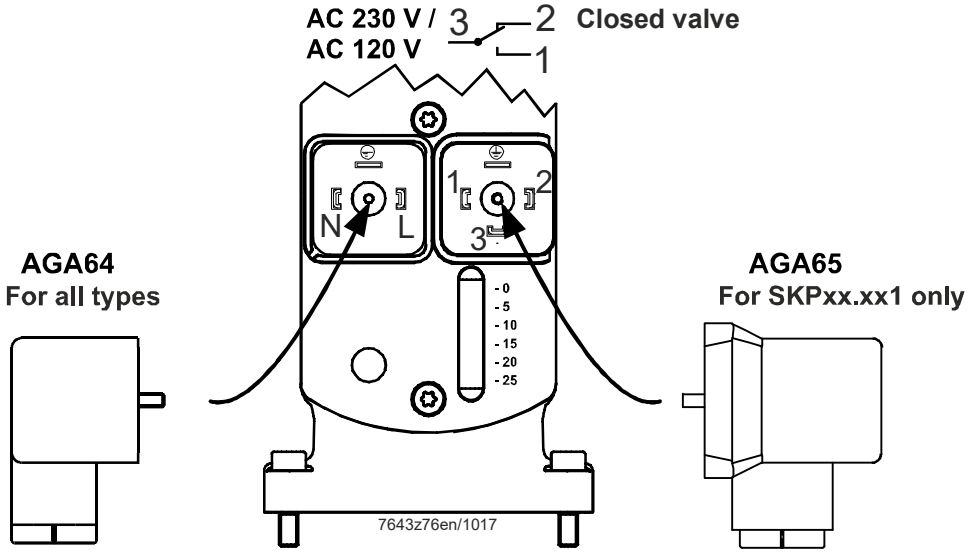

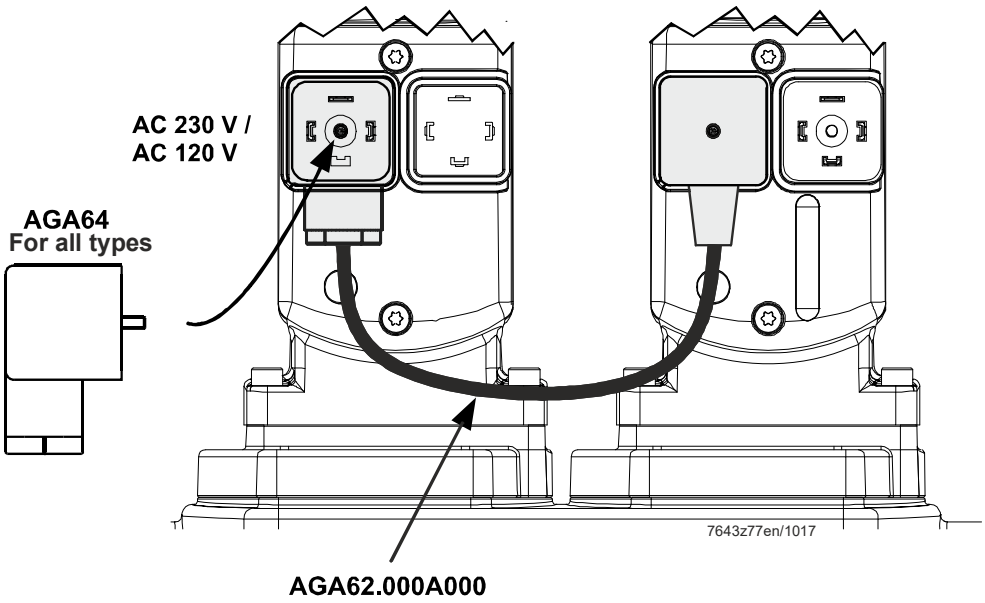

2.2 SKP15 actuator

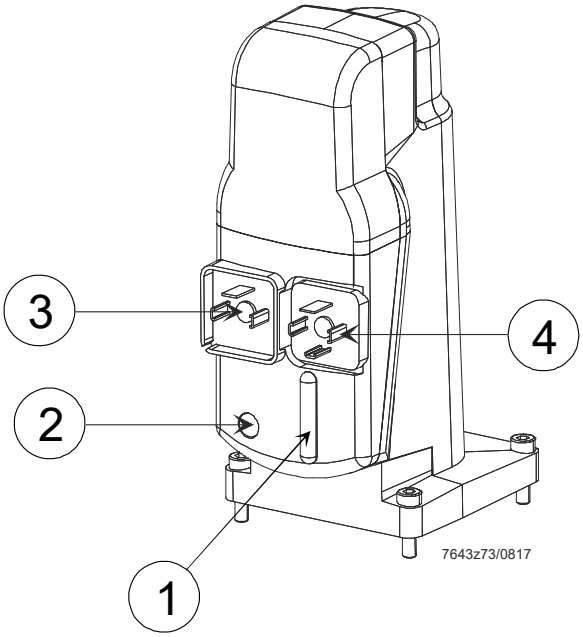

① Valve stroke display

② Indication of operating state (LED)

③ Power supply

④ End switch (valve CLOSED)

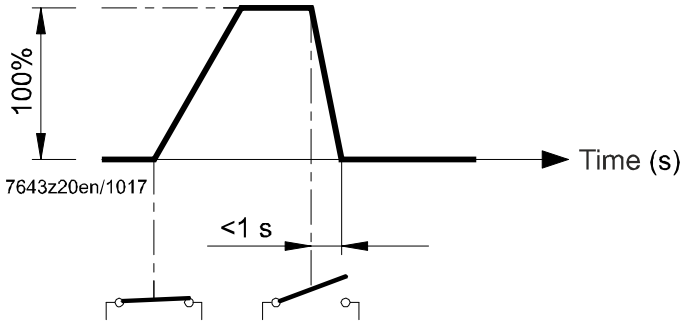

Service note!
No spare parts are available for the SKP15 actuator (security regulating unit).
The entire actuator can only be replaced by contacting the burner manufacturer.

2.3 SKP25 actuator

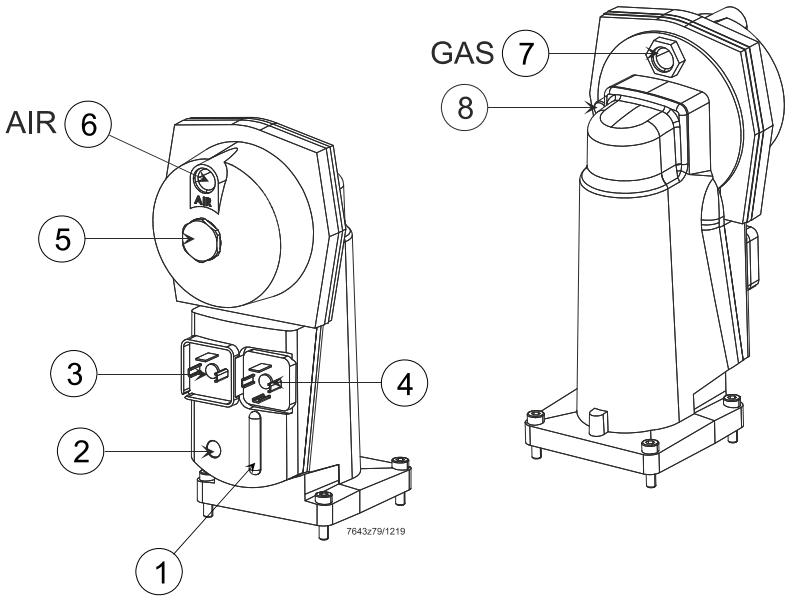

① Valve stroke display
② Indication of operating state (LED)
③ Power supply
④ End switch (valve CLOSED)
⑤ Setpoint spring setting
⑥ Vent opening / Assembly of the AGA25.2 damping throttle
⑦ Gas connection
⑧ Gas pressure test point

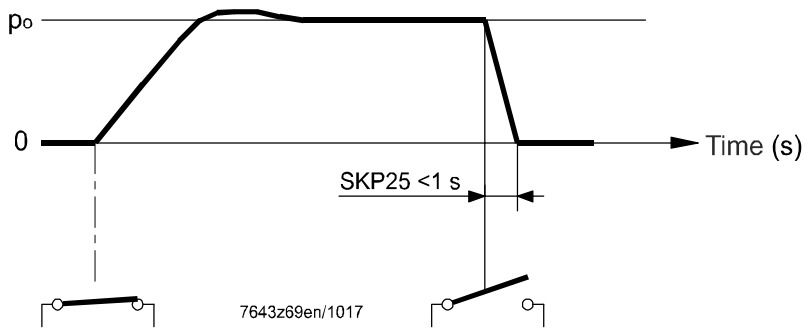

Key
po Control pressure

Service note!
No spare parts are available for the SKP25 actuator (security regulating unit).
The entire actuator can only be replaced by contacting the burner manufacturer.

Note!
The vent opening⑥ must not be closed or clogged as a result of contamination.

2.4 Gas pressure test point on the SKP25

CAUTION!
Risk of gas leak!
The gas pressure test point must be closed again once the pressure has been measured. It is essential to check the seal is tight.
Failure to observe this information poses a risk of personal injury, property damage, and environmental harm.

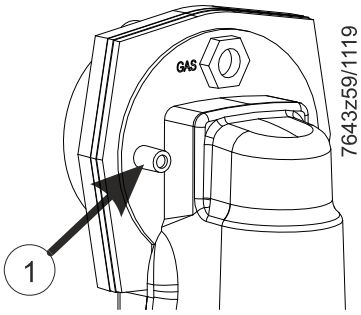

① Gas pressure test point

Step 1

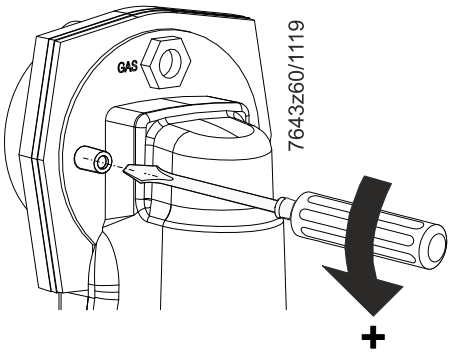

Step 2

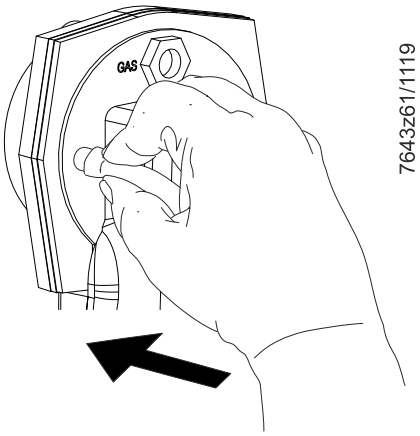

Step 3

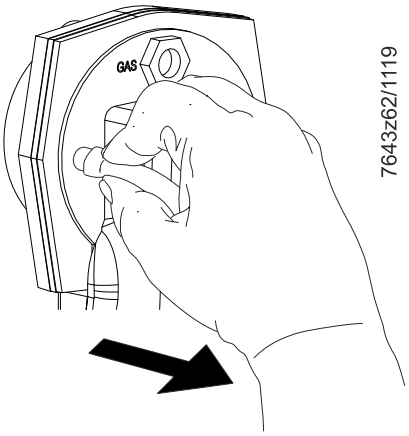

Step 4

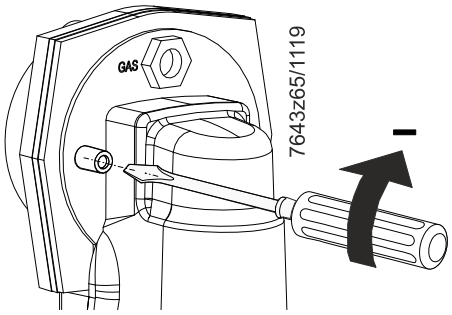

2.5 Description of the VGD4/VRD4 double gas valve

Work on the VGD4/VRD4 double gas valve may only be carried out by qualified personnel.

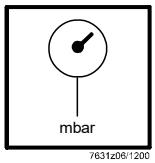

Maximum operating pressure
Pmax = 100 kPa DN 40/50
Pmax = 70 kPa DN 65…150

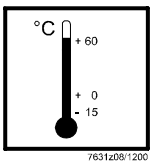

Ambient temperature
-15...+60°C

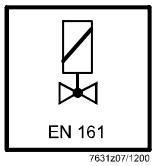

Valve 1 + Valve 2, Class A, Group 2 according to EN 161

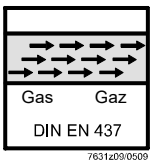

<60°C air
Family 1 + 2 + 3

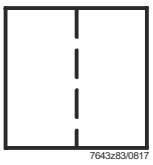

Built-in filter, mesh size 0.9 mm

2.6 Mounting position

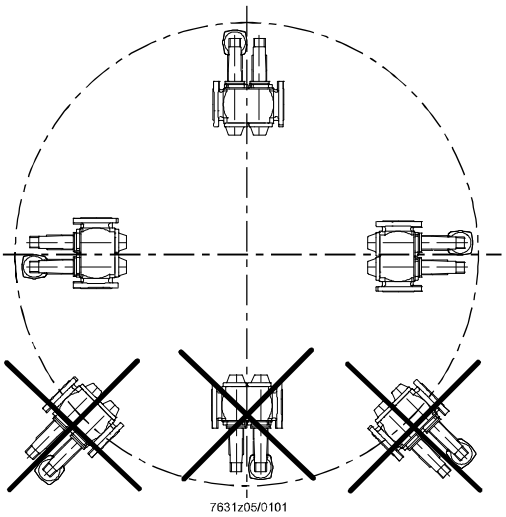

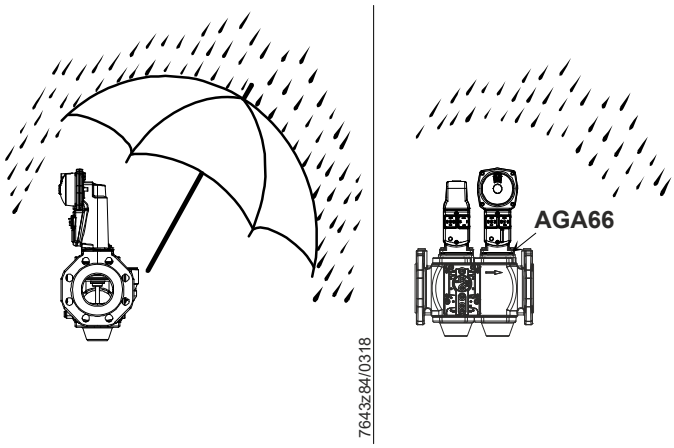

Note!
The AGA66 gasket set increases the degree of protection for the valve combination from IP54 to IP65!

2.7 Torques

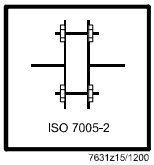

Max. torques / flange connection and stud screws according to DIN 939

- Tighten locking and connecting screws in the appropriate manner
- Note the material pairing of aluminum/steel!

DN40…50	M16 x 65	50 ±5 Nm
DN65…100	M16 x 65	80 ±8 Nm
DN125	M16 x 75	160 ±16 Nm
DN150	M20 x 80	160 ±16 Nm

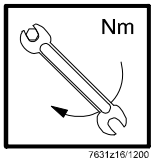

Max. torque of the pressure connections

M4	G1/8	G1/4	G3/4
3 Nm	8 Nm	15 Nm	35 Nm

2.8 Installation dimensions for the VGD4 double gas valve with SKPx5 actuator

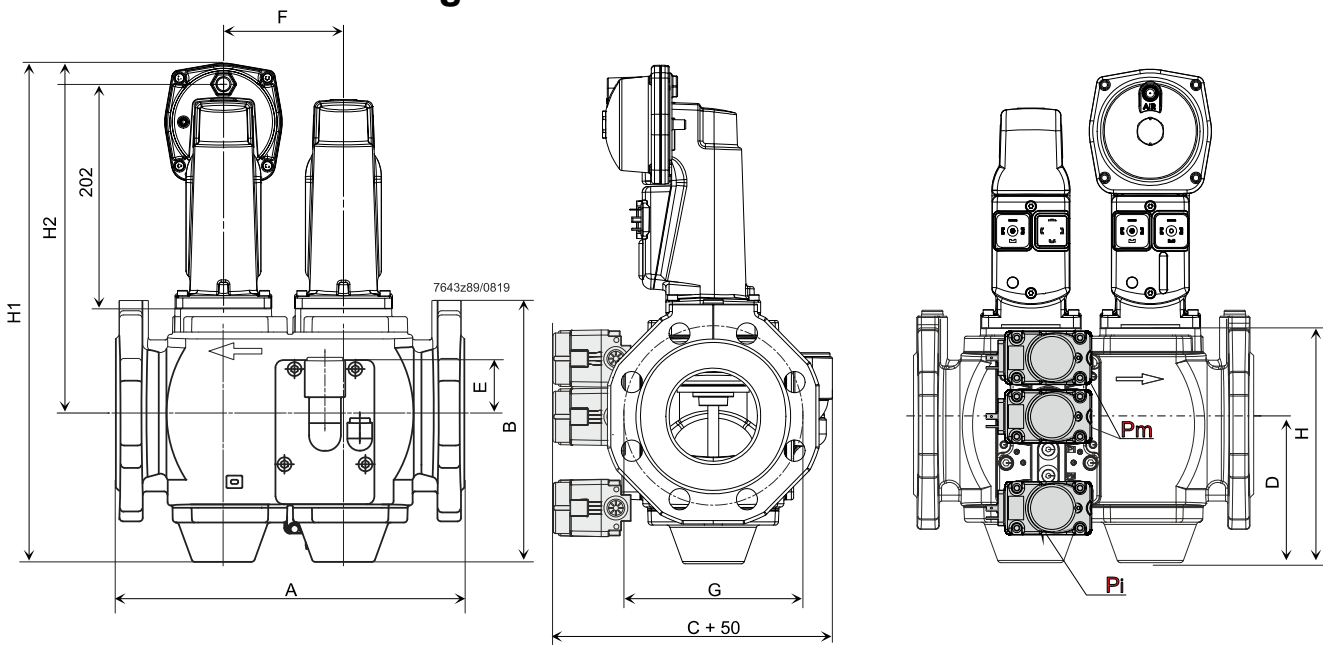

Type	DN	A	B	C	D	E	F	G	H	SKP15		SKP25	
										H1	H2	H1	H2
VGD40.040 / L VRD40.040	40	240	195	168	115	58	88	110	194	382	267	415	300
VGD40.050 / L VRD40.050	50	240	202	175	115	58	88	125	194	382	267	415	300
VGD40.065 / L VRD40.065	65	290	214	195	118	60	102	145	200	388	270	421	303
VGD40.080 / L VRD40.080	80	310	236	204	132	54	107	160	224	412	280	445	313
VGD40.100 / L VRD40.100	100	350	259	228	145	43	131	180	255	443	298	476	331
VGD40.125 / L VRD40.125	125	400	305	256	175	31	150	210	303	491	316	524	349
VGD40.150 / L VRD40.150	150	480	335	294	188	20	168	240	333	521	333	554	366
VGD41.040	40	240	195	149	115	58	88	110	194	382	267	415	300
VGD41.050	50	240	202	160	115	58	88	125	194	382	267	415	300
VGD41.065	65	290	214	178	118	60	102	145	200	388	270	421	303
VGD41.080	80	310	236	192	132	54	107	160	224	412	280	445	313
VGD41.100	100	350	259	208	145	43	131	180	255	443	298	476	331
VGD41.125	125	400	305	236	175	31	150	210	303	491	316	524	349
VGD41.150	150	480	335	276	188	20	168	240	333	521	333	554	366

Note!
VGD40.xxxL double gas valves are supplied with reverse-mounted connecting plates.

2.9 Pressure connections

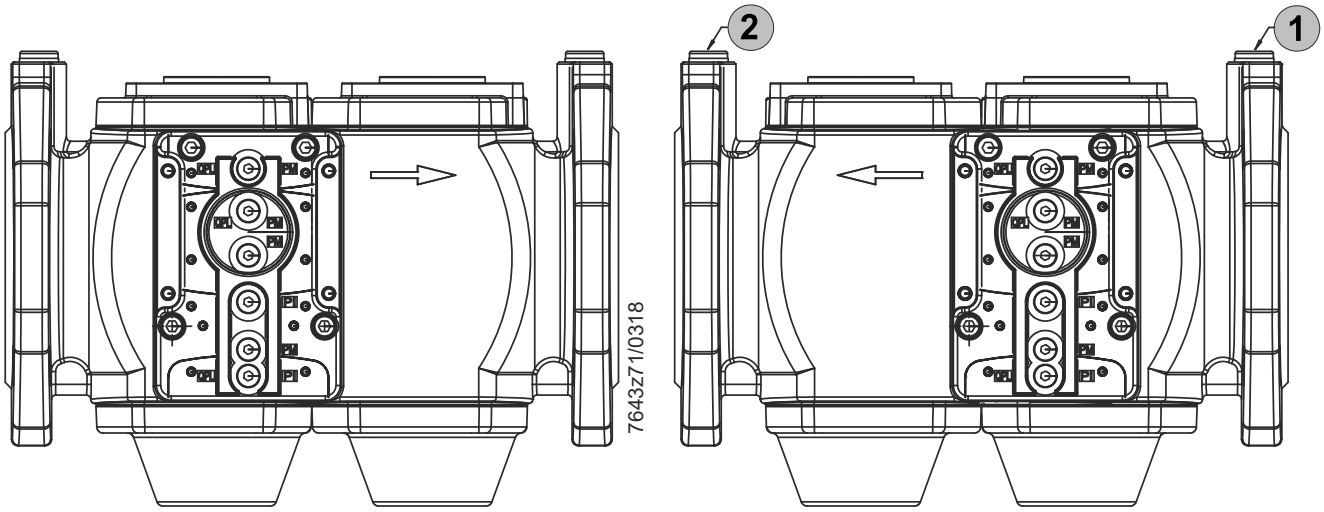

VGD40/VRD40

VGD40/VRD40

Pressure switch connecting plate AGA40.41

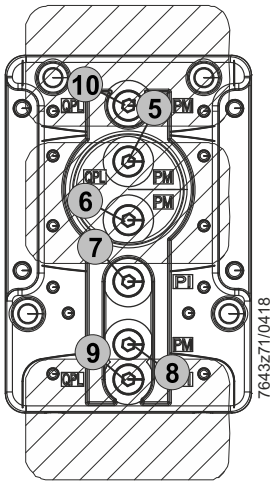

Pilot gas connecting plate AGA40.40

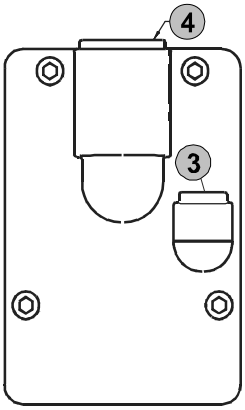

Pressure switch connecting plate (mounted on both sides)

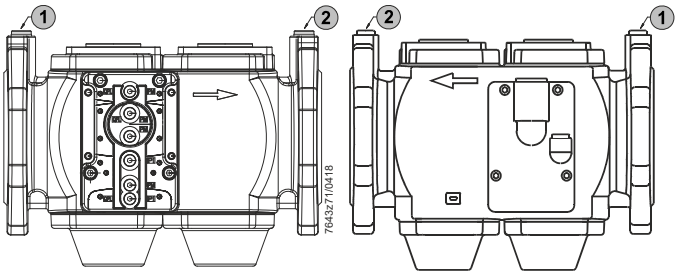

VGD41

VGD41

Key

Mounting surface of the QPLx5 pressure switch

6 + 9 Pressure connection for the QPLx5 pressure switch

Note!
Remove M4 locking screws as required.

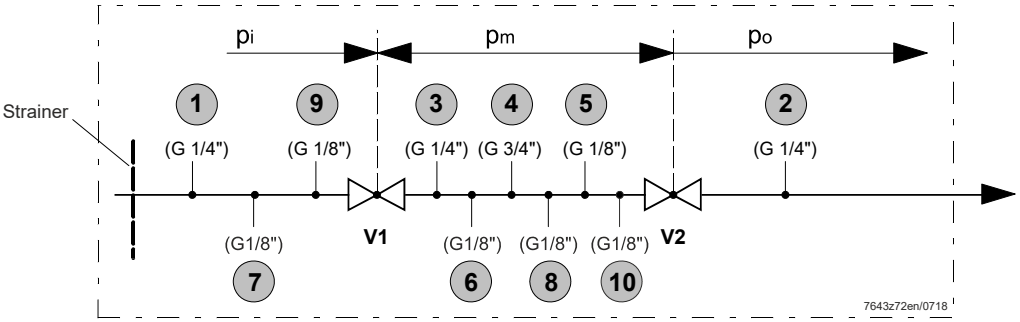

Key

pi Inlet pressure

pm Pressure between valve V1/V2

po Outlet pressure for valve V2

3 Description of the mountable QPLx5 pressure switches

The QPLx5 pressure switch is designed to monitor the gas pressure. When the pressure falls below or exceeds the adjusted switching point, the respective electrical circuit will be opened or changes over.

Caution!
Service note!
The QPLx5 also has to be replaced when replacing a valve.
It is recommended to replace the QPLx5 after over 50,000 cycles or a service life of 10 years due to the designed lifetime for gas pressure switches according to AFECOR. It is not recommended to reinstall these, even if the seals on the valve have been replaced.

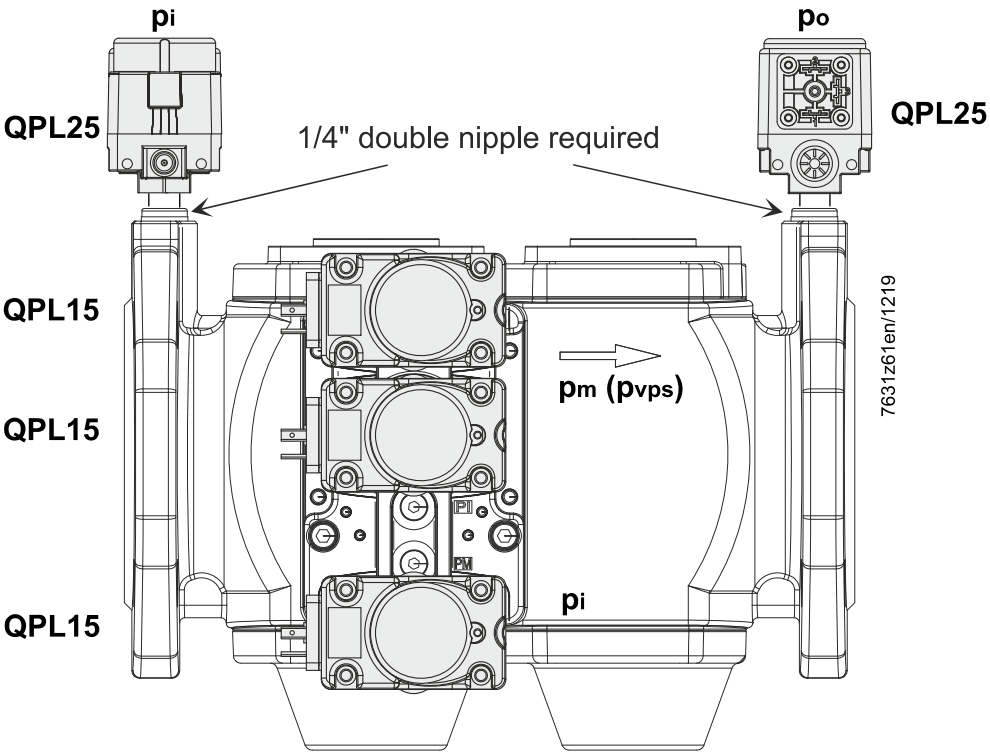

Attachment options

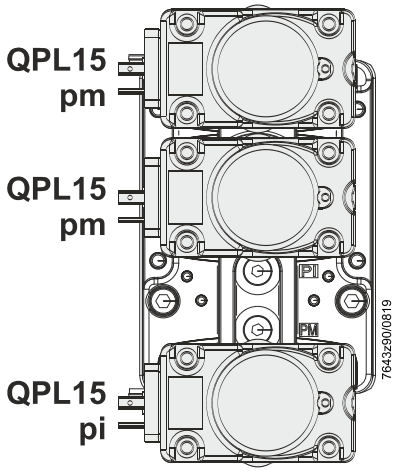

3x pressure switches (2x pm, pi)

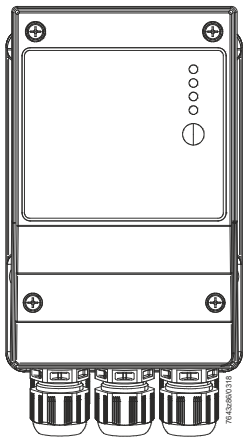

Example (not binding)
Valve proving control "A"

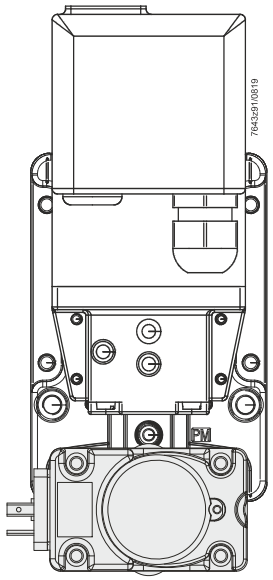

Example (not binding)
Valve proving control "B" and
pressure switch QPL15 (pi) below

Key

pi	Inlet pressure
pm (pvps)	Pressure between valve V1/V2
po	Outlet pressure for valve V2

4 Connection diagram

4.1 Function as a minimum/maximum pressure switch

Minimum pressure switch
When the pressure falls below the set value, NO opens and NC closes

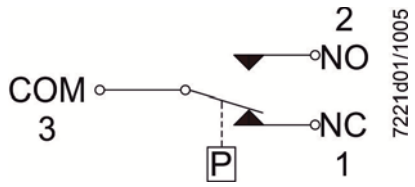

Maximum pressure switch
When the pressure exceeds the set value, NC opens and NO closes

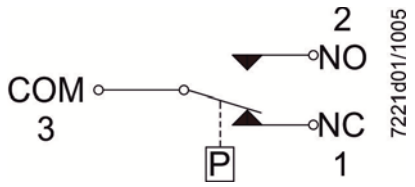

4.2 Connection via connector AGA65 according to DIN 43650

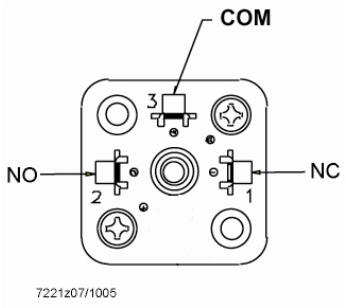

5 Technical data

5.1 SKPx5 actuator

Environmental conditions

Operation	DIN EN 60721-3-3
Climatic conditions	Class 3K3
Mechanical conditions	Class 3M3
Temperature range	-10…+60°C (longer opening times below 0°C) -20…+60°C (with heating element AGA63.5A27)
→ SKP25.2	-10…+50°C (restricted operating conditions
Humidity	<95% r.h.
Installation altitude	Max. 2,000 m above sea level

5.2 VGD4/VRD4 double gas valve

Environmental conditions

Operation	DIN EN 60721-3-3
Climatic conditions	Class 3K5
Mechanical conditions	Class 3M2
Temperature range	-10…60°C
Humidity	<95% r.h.
Installation altitude	Max. 2,000 m above sea level

Note!
For the model number of the VGD4/VRD4 double gas valve, see the nameplate on the SKPx5 actuator!

5.3 QPLx5 pressure switch

Environmental conditions

Operation	DIN EN 60721-3-3
Climatic conditions	Class 3K5
Mechanical conditions	Class 3M2
Temperature range	-15…+60°C
Humidity	<95% r.h.

Caution!
Condensation, formation of ice, and ingress of water are not permitted.

6 Spare parts and accessories

Please note the different article numbers for the VGD4/VRD4 double gas valves and the SKPx5 actuator when ordering spare parts.

		Article no	Type
	Adapter plug For powering both SKPx5 actuators on the VGD4/VRD4 double gas valve with an AGA64 connector.	**BPZ:AGA62.000A000**	**AGA62.000A000**
	Contact box for valve actuator (power supply) • Plug-in connector conforming to DIN EN 175301-803-A • 3-pole + protective ground • Ø 6…9 mm / max. 1.5 mm²	**BPZ:AGA64**	**AGA64**
	Contact box for end switch • Plug-in connector conforming to DIN EN 175301-803-A • 3-pole + protective ground • Ø 4.5…11 mm / max. 1.5 mm²	**BPZ:AGA65**	**AGA65**
	Heating element • For use at low ambient temperatures (-10…< -20°C) • Refer to data sheet N7923	**BPZ:AGA63.5A27**	**AGA63.5A27**
	Gasket set • For mounting between SKPx5 actuator and VGD4/VRD4 double gas valve • Increases degree of protection from IP54 to IP65 • Take note of data sheet N7631 when using VGD4/VRD4 double gas valves • Refer to Mounting Instruction M7643.2 (74 319 0421 0)	**BPZ:AGA66**	**AGA66**
	Damping throttle for the SKP25 actuator Optional	**BPZ:AGA25.2**	**AGA25.2**

		Article no	Type
	Setpoint spring (yellow/gold) for SKP25 actuator • Optional for built-in standard spring AGA29 • 1.5…12 kPa for SKP25.0 actuator • 7…70 kPa for SKP25.4 actuator (optionally for AGA23 setpoint spring) • Ø 1.6 mm	**BPZ:AGA22**	**AGA22**
	Setpoint spring (red) for SKP25 actuator • Optional for built-in standard spring AGA29 • 10…25 kPa for SKP25.0 actuator • 15…150 kPa as a standard spring for SKP25.4 actuator • Ø 1.8 mm	**BPZ:AGA23**	**AGA23**
	Setpoint spring (unpainted) for SKP25.0 actuator • Equivalent built-in standard spring • 0.05…2.2 kPa • Ø 1 mm	**BPZ:AGA29**	**AGA29**
	AGA30.x setpoint fine adjustment for SKP25 actuator • Packaging version with one setpoint spring each • Refer to Mounting Instruction M7643 (74 319 0926 0) Setpoint spring (gold) • 1.5…12 kPa • Ø 1.6 mm	**BPZ:AGA30.0**	**AGA30.0**
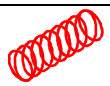	Setpoint spring (red) • 10…25 kPa • Ø 1.8 mm	**BPZ:AGA30.1**	**AGA30.1**
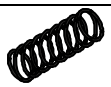	Setpoint spring (unpainted) • 10…36 kPa • Ø 2 mm	**BPZ:AGA30.2**	**AGA30.2**

QPL15 pressure switch for VGD
- For monitoring the gas or air pressure
- O-ring connection

See data sheet N7221 and mounting instructions M7221 (74 319 0551 0)

- **QPL25 pressure switch** for VGD
- For monitoring the gas or air pressure
- ¼“ connection

See data sheet N7221 and mounting instructions M7221 (74 319 0551 0)

7 Lifetime

The combination of VGD4/VRD4 double gas valve and SKPx5 actuator has a design lifetime* of

Nominal size	Burner startup cycles
≤DN 25	200,000
DN 25...80	100,000
DN 80...150	50,000

when using gases according to EN 437 (or DVGW specification G260).

This is based on the endurance tests specified in the standard EN 161.
A summary of the conditions has been published by the European Control Manufacturers Association (Afecor) (www.afecor.org).

The designed lifetime is based on the use of a VGD4/VRD4 double gas valve and an SKPx5 actuator according to the manufacturer's data sheet. After reaching the designed lifetime in terms of the number of burner startup cycles, or after the corresponding usage time, the VGD4/VRD4 double gas valve and SKPx5 actuator must be checked and/or replaced by authorized personnel.

The criteria set out in EN 161 / EN 13611 are applicable when testing the tightness. This test can be omitted if a valve proving system is in place.

* The designed lifetime is not the warranty time specified in the Terms of Delivery.

Safety components	**Structural lifetime**		**CEN standard**
	Number of cycles	**Time (years)**	
Gas pressure monitor	50,000	10	EN 1854
Double gas valve (with valve proving system)	After detecting a fault		EN 1643
Double gas valve (without valve proving system)	50,000…200,000	10	EN 126 EN 161

Siemens AG Smart Infrastructure
Berliner Ring 23
76437 Rastatt, Germany
Tel. +49 7222 598 279
www.siemens.com
© 2019 Siemens AG Smart Infrastructure
Subject to change!